GRID LOCATION
6-7/D1-C1

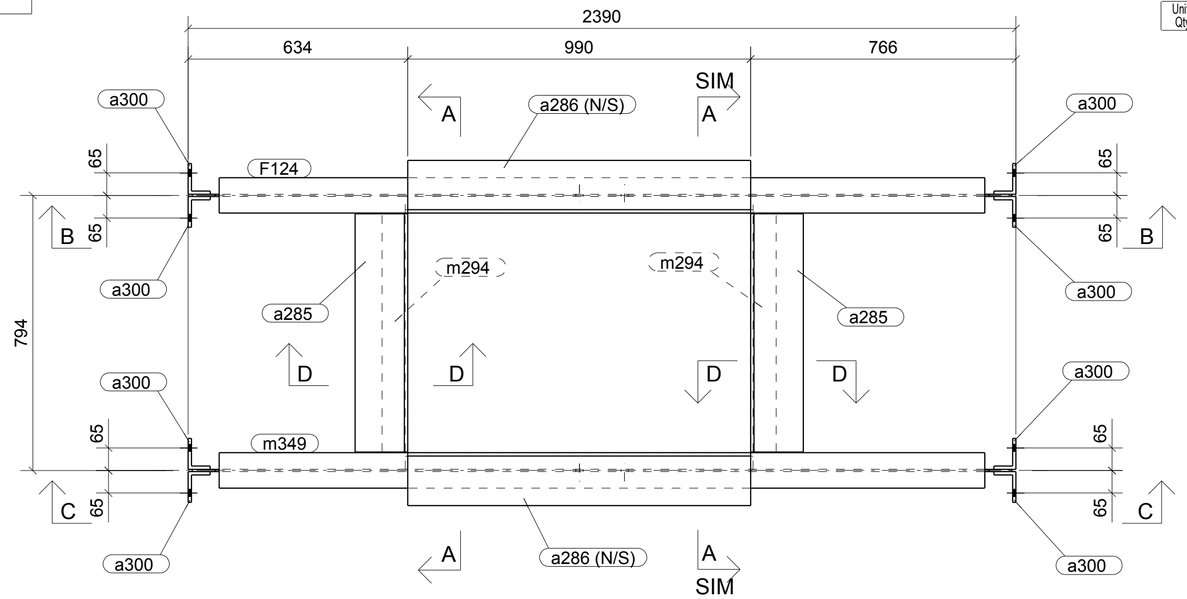

Unit Qty	Workshop Bolts (FOR ONE ASSEMBLY ONLY)	Length

Unit Qty	Field Bolts (FOR ONE ASSEMBLY ONLY)	Length
24	19 Ø A325_TYPE3 BOLT	51

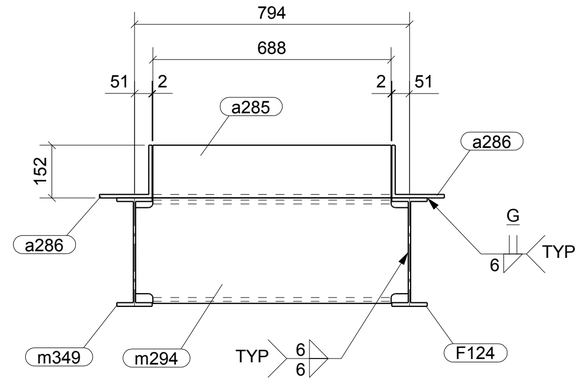

A - A

BILL OF MATERIAL

MARK	QTY	SECTION		LENGTH	WT	CAT
F124	1	FRAME				
F124	1	W310X33	350W	2366		
a285	2	L152X152X9.5	300W	687		
a286	2	L152X152X9.5	300W	990		
a300	8	L89X64X9.5	300W	226		
m294	2	C310X31	300W	787		
m349	1	W310X33	350W	2366		

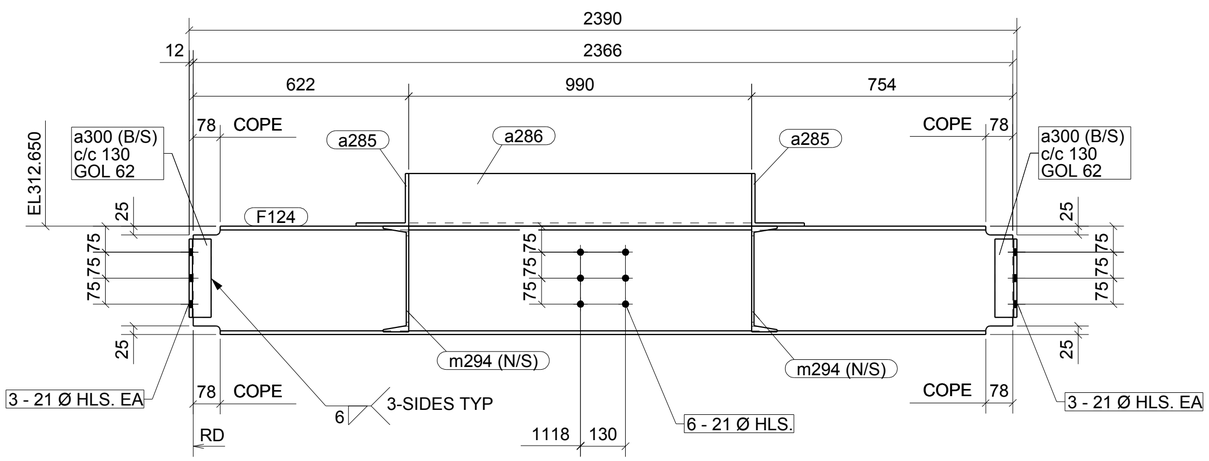

B - B

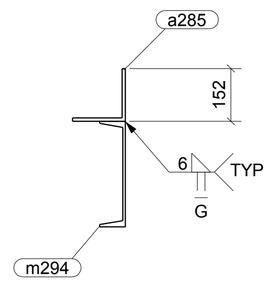

D - D

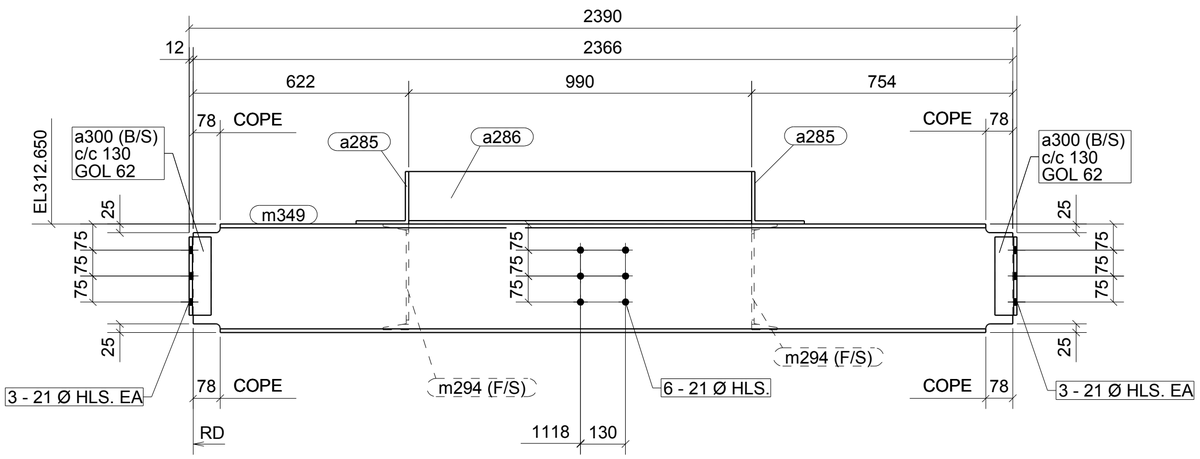

C - C

1 - FRAME - F124

INSPECTION STATUS	FITTING CREW LEADER		WELDING CREW LEADER		FINAL INSPECTION SHOP FOREMAN	
	FITTER		WELDER			